Battery 19" 4U / 250Ah

SLB48-250-146-2
14S Series, Generation 5

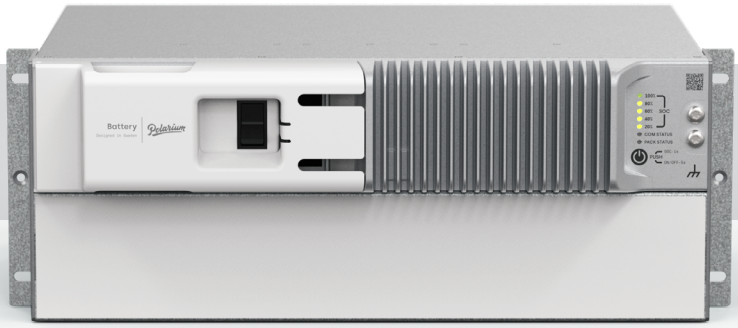

Polarium Battery is an advanced power backup system for telecom use. Its rechargeable smart lithium-ion battery provides reliable power backup for hybrid, off-grid and grid-connected telecom sites worldwide.

Safe
All our products are designed with your safety in mind - thoroughly verified and certified for safe operation.

Simple
Advanced technology made super easy to use. easy to install, maintenance free, charge control.

Strong
Works in all conditions and environments. Extra protection against dust and moisture for prolonged life.

Smart
Automatic balancing, automatic reconnect, remote monitoring options and much more.

Secure
Our unique, patented Anti-Theft Device disables function of batteries if removed from site. It's prepared for optional GPS tracker.

Sustainable
The lifetime is extraordinary long. It's small, light, maintenance free and can be remotely controlled.

DS2501462-Rev 1.0

Technical Specification

Enclosure Size	19" 4U
Lithium Chemistry	NMC
Rated Voltage	48 V
Rated Capacity Ah (0.2C, 25°C to 35 V)	250 Ah
Rated Energy Wh (0.2C, 25°C to 35 V)	12959 Wh
Calendar Life @ 80% SOC	20 years
Peak Discharge Power	6kW for 60 seconds
Discharge Cutoff Current	100 A
End-of-Discharge Voltage (LVBD)**	35 V
Charge Current Limitation (CLD)*	100 A
Charge Voltage for 100% SOC	58.8 V
Charge Voltage for 80% SOC	56 V
Operating Temperature Charging	0 to +55°C (32 to 131°F)
Operating Temperature Discharging	-20 to +60°C (-4 to 140°F)
Operating Relative Humidity	According to ETSI 300 019-1-3 class 3.2 (0-95%)
Storage Temperature	-20 to +60°C (-4 to 140°F)
Weight	Approx. 66 Kg (145.5 lbs)
Dimensions mm (in")	W 440 D 557 H 173 (W 17.3" D 21.9" H 6.9")
Circuit breaker	100 A, BMS Controlled, single pole
IP class	IP20
Communication Protocols	RS485, RJ45 (2) ports, Modbus
Safety Standards	IEC62619, IEC62368, UN38.3
Management & Monitoring	Software for PC (Studio) included for full local monitoring and management. Remote connection via Modbus

*If the charge current is 100A or higher, the battery will automatically reduce the charge current to 6-12A temporarily
** Cut off when one cell reaches 3.0V, 14 cells in series
Data subject to change without notice

Polarium Energy Solutions AB
Jan Stenbecks Torg 17 | PO Box 1037 | SE-164 21, Kista, Sweden
Phone: +46 8 5454 4000 | info@polarium.com | www.polarium.com

Battery 19" 4U / 250Ah

SLB48-250-146-2
14S Series, Generation 5

Constant Current (A) @ 25°C

Duration (Hours)

End of Discharge Voltage	1	2	3	4	5	6	7	8	9	10	12	14	16	20	24
51	N/A	58.9	41.0	31.5	25.5	21.4	18.4	16.2	14.4	12.9	10.7	9.1	7.9	6.2	5.1
49	N/A	72.3	49.9	38.2	30.9	26.0	22.4	19.6	17.5	15.7	13.1	11.2	9.7	7.7	6.3
47	N/A	85.9	58.9	45.0	36.3	30.5	26.3	23.0	20.5	18.5	15.4	13.2	11.5	9.2	7.6
45	N/A	98.8	67.4	51.2	41.4	34.7	29.9	26.2	23.4	21.1	17.6	15.1	13.2	10.5	8.7
43	N/A	N/A	74.5	56.5	45.6	38.2	32.9	28.9	25.7	23.2	19.4	16.6	14.6	11.7	9.7
41	N/A	N/A	79.9	60.4	48.7	40.8	35.1	30.8	27.4	24.7	20.7	17.8	15.6	12.5	10.4
39	N/A	N/A	82.9	62.6	50.3	42.1	36.2	31.8	28.3	25.5	21.3	18.3	16.1	12.9	10.7
37	N/A	N/A	83.2	62.8	50.4	42.2	36.2	31.8	28.3	25.5	21.3	18.3	16.1	12.9	10.7
35	N/A	N/A	83.2	62.8	50.4	42.2	36.2	31.8	28.3	25.5	21.3	18.3	16.1	12.9	10.7

Constant Power (W) @ 25°C

Duration (Hours)

End of Discharge Voltage	1	2	3	4	5	6	7	8	9	10	12	14	16	20	24
51	N/A	3162	2225	1720	1401	1179	1016	890	791	710	586	496	428	332	267
49	N/A	3785	2643	2038	1658	1397	1205	1058	941	847	703	598	518	405	329
47	N/A	4405	3055	2348	1910	1609	1389	1221	1088	981	816	697	606	478	391
45	N/A	N/A	3435	2634	2139	1802	1556	1369	1222	1102	920	788	687	545	448
43	N/A	N/A	3760	2874	2331	1962	1695	1491	1331	1202	1005	862	754	600	496
41	N/A	N/A	4004	3052	2471	2078	1794	1578	1409	1272	1064	914	800	639	530
39	N/A	N/A	N/A	3153	2548	2139	1845	1622	1447	1306	1093	939	822	658	547
37	N/A	N/A	N/A	3170	2555	2142	1845	1622	1447	1306	1093	939	822	658	547
35	N/A	N/A	N/A	3170	2555	2142	1845	1622	1447	1306	1093	939	822	658	547

Energy / Wh @ 25°C

Duration (Hours)

End of Discharge Voltage	1	2	3	4	5	10
51	N/A	6325	6675	6880	7003	7097
49	N/A	7569	7929	8150	8291	8468
47	N/A	8810	9164	9394	9548	9806
45	N/A	9971	10306	10535	10697	11019
43	N/A	N/A	11279	11497	11656	12017
41	N/A	N/A	12011	12207	12355	12718
39	N/A	N/A	12447	12612	12739	13062
37	N/A	N/A	12551	12679	12776	13062
35	N/A	N/A	12551	12679	12776	13062

State of Charge vs Voltage

Voltage (V)

State of Charge	0.2 C	0.5 C	1.0 C
100%	58.5	N/A	N/A
90%	56.6	N/A	N/A
80%	55.4	N/A	N/A
70%	53.9	N/A	N/A
60%	52.6	N/A	N/A
50%	51.2	N/A	N/A
40%	50.1	N/A	N/A
30%	49.0	N/A	N/A
20%	47.6	N/A	N/A
10%	44.2	N/A	N/A
0%	35.0	N/A	N/A
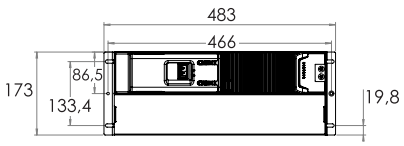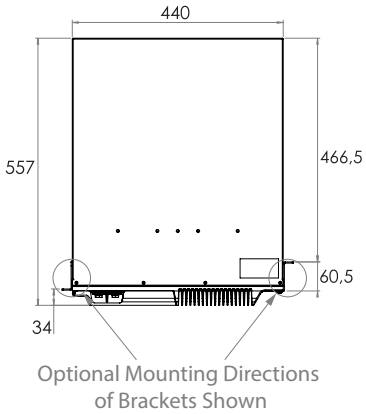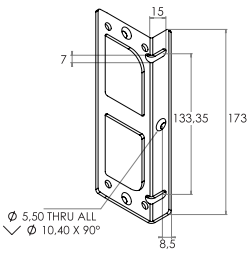
Technical Drawings